Datasheet

QET Vidar TWPA

Three-Wave Mixing TWPA



Typical Performance	
Average parametric gain	19 dB over 4-8 GHz
Average effective gain	18 dB over 4-8 GHz
Available Signal bands	4-8 GHz / 4-10 GHz
Expected Added Noise	<1 photon
Insertion loss	Typically 1-2 dB
Saturation power	~−102 dBm
Average parametric ΔSNR	11 dB over 4-8 GHz
Average effective ΔSNR	10 dB,over 4-8 GHz

Physical Parameters	
Dimensions without connectors: (total footprint incl. flux shield)	35 mm×30 mm×11 mm
Dimensions with connectors: (total footprint incl. flux shield)	47 mm×37 mm×11 mm
Weight:	100 g

Typical Operating Parameters	
Pump frequency	~10-15 GHz
Pump power	~−70 dBm
Bias current	~10-25 μA
Bias sweep rate	≤300 nA/s
Operational temperature	≤100 mK

Fully Packaged Three-Wave Mixing TWPA

The QET Vidar TWPA is a packaged three-wave mixing TWPA featuring an integrated flux coil, ESD protection, and magnetic flux shielding—all in one compact unit. It offers an easy-to-use solution with a large signal-to-noise ratio improvement across a wide bandwidth, while minimizing the added thermal load on your cryostat.

The QET Vidar TWPA is available in two variants: a single TWPA or a dual TWPA configuration, with both amplifiers integrated on the same chip and in the same package.

Key Features

Broadband, Low-Noise Performance

Based on QET's patented dispersion engineering and three-wave mixing technology, the Vidar TWPA is available in 4–8 GHz and 4–10 GHz versions, providing broadband gain across their respective operating bands.

- Near-quantum-limited noise performance with an instantaneous bandwidth up to 6GHz.
- Up to 3 GHz idler-free bandwidth: Especially suitable for multiplexing.
- No stopbands in the gain band, thanks to three-wave mixing (3WM) and our dispersion engineering.
- High effective ΔSNR of ~10 dB, including insertion loss and even when followed by a state-of-the-art HEMT LNA.

Both versions provide broadband gain across their specified operating bands. Performance can be fine-tuned through flux bias, pump power and pump frequency.

Clean Pump Handling

The pump frequency is well detuned from the signal band (~10-15 GHz), which reduces interference with sensitive devices and allows for straightforward filtering.

- Minimal backaction on signal sources, due to both pump detuning and low required pump power from the high device nonlinearity.

Optimised Biasing for Cryogenic Environments

The integrated coil enables both stable flux biasing and inherent shielding from external magnetic flux.

- Very small bias currents (~10-25 μA) enabled by the integrated coil.
- Reduced magnetic disturbance in the cryostat.
- Strong resistance to low-frequency noise (e.g. 50 Hz) in the bias line thanks to the large coil.

Integrated Magnetic Shielding and ESD Protection

- The built-in cryoperm flux shield keeps internal magnetic fields contained while blocking external interference.
- Integrated ESD protection minimises risk during handling and installation.
- These integrated protections contribute to reliable, user-friendly operation.

Compact Footprint and Scalable Integration

Designed to save valuable space in cryogenic setups.

- Two TWPAs can be integrated in one compact package.
- Built-in cryoperm shielding eliminates the need for a large external magnetic shield.

Typical Performance

The graphs below show typical measured performance for the QET Vidar TWPA 4–8 GHz and 4–10 GHz versions. The 4–8 GHz version provides strong and relatively uniform gain and effective ΔSNR across its specified band, while the 4–10 GHz version extends the operating range with some reduction in effective ΔSNR towards the upper end of the band.

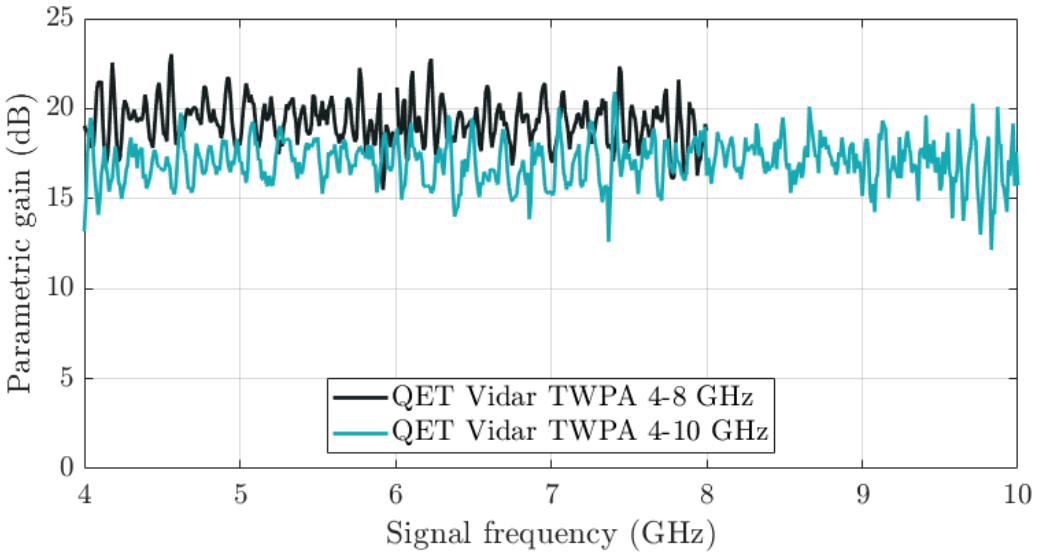

Example parametric gain vs frequency for the QET Vidar TWPA 4-8 GHz and 4-10 GHz versions.

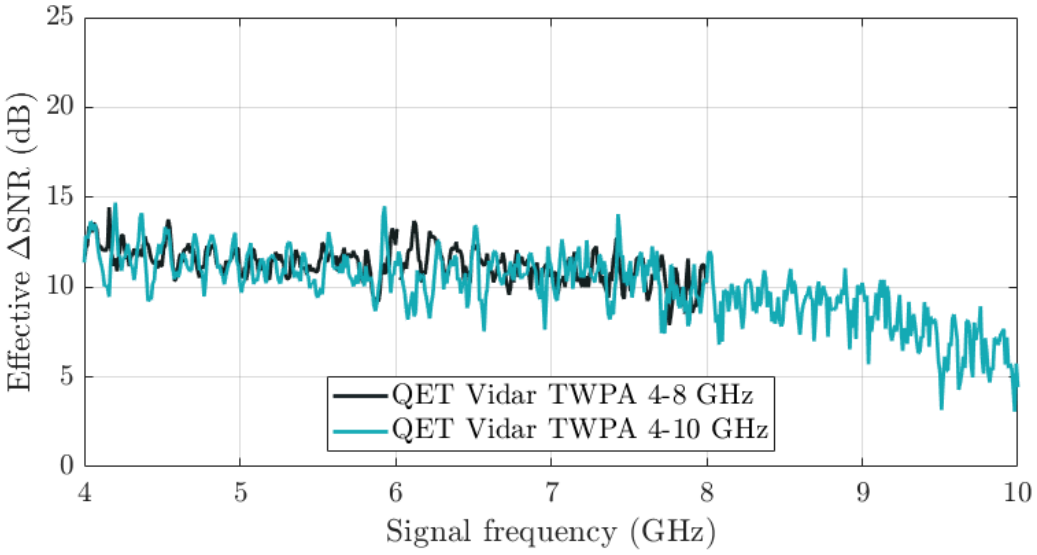

Example effective ΔSNR vs frequency for the QET Vidar TWPA 4–8 GHz and 4–10 GHz versions.

Proposed Setup and Port Configuration

To couple the pump to the signal without allowing it to propagate through the device under test (DUT), a directional coupler or diplexer should be inserted before the TWPA. If the TWPA is followed by noisy components, such as a HEMT LNA, one or two isolators are recommended after the TWPA. Depending on the DUT's sensitivity to pump leakage and to signal and idler reflections, one or two isolators may also be beneficial before the TWPA.

TWPA Model S – Single Channel Setup

The QET Vidar TWPA Model S contains one TWPA. Two RF ports are used: one for signal and pump input, the other for output. Two DC ports are used for flux bias in and out.

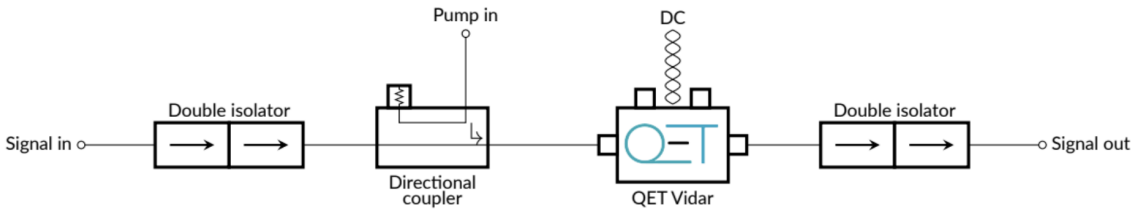

Suggested setup using a single TWPA. One directional coupler is used to combine pump and signal input. Two isolators may be placed before and after the TWPA.

TWPA Model D – Dual Channel Setup

The QET Vidar TWPA Model D contains two independent TWPAs within the same enclosure. Each TWPA uses two RF ports—one for input and one for output—and shares the same pair of DC flux bias ports. When using both TWPAs simultaneously, each requires its own directional coupler and isolators.

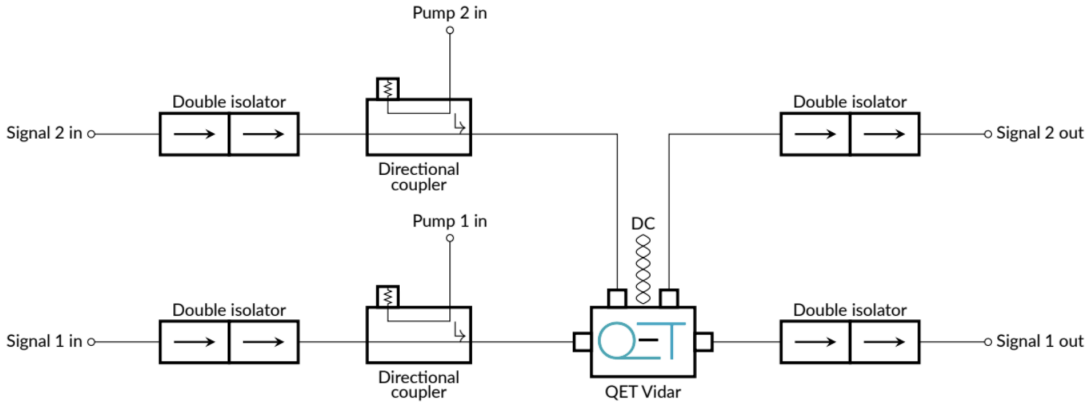

Suggested setup using both TWPAs in Model D. Each channel has a dedicated pump and signal input, and its own isolators.

QET Sweden AB
Läraregatan 3
411 33 Göteborg
Sweden

www.qetsweden.com
info@qetsweden.com