gMOT – Compact Grating Magneto-Optical Trap

CPI Electron Devices Business – CPI TMD Technologies Division



The gMOT device is a compact, portable grating magneto-optical trap capable of trapping 6 million alkali-metal atoms with temperatures below 10 microkelvin demonstrated.

It provides a precision sensing capability across several markets, ranging from academic research to civilian and defence applications.

The device makes use of the latest advances in microfabricated silicon etching technology to manufacture the patented gMOT grating design. It also employs novel vacuum engineering and optical design to provide a portable and rugged ultra-high vacuum device.

The module can be supplied with a laser system but comes without as standard so the customer can choose to integrate the device into an existing set-up with their own laser system.

The device will be supplied with a 15 W USB-C power supply as a standard prime power source.

The MOT lifetime is indefinite whilst the ion-pump is operational. When the ion-pump is turned off, the lifetime of the MOT remains operational for > 10 days.

These devices are fully tested to agreed acceptance test procedures before shipment, to meet customer requirements.

This product is ITAR-free.

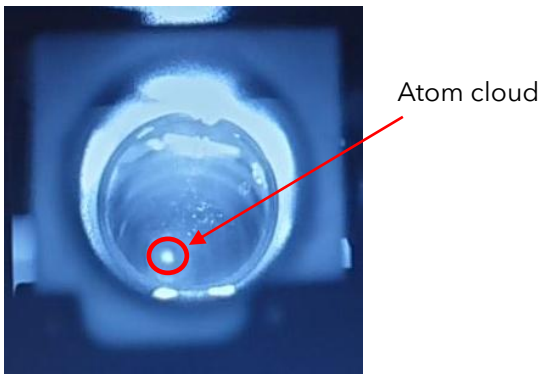

Figure 1. gMOT trapped atom cloud

Performance

Vacuum level	1x10-7 mbar typical (with Rb dispenser on)

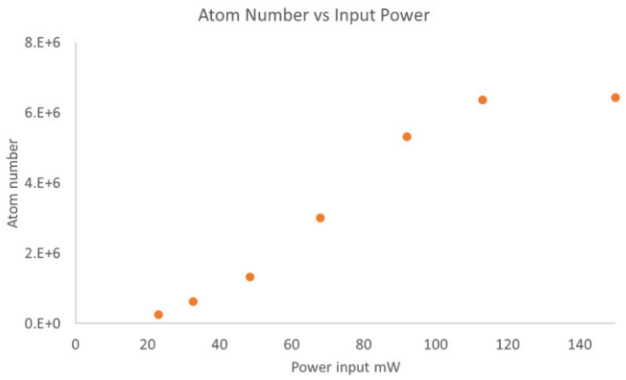

Atom loading time	100 ms typical
Vacuum lifetime	Indefinite with pump Unpumped minimum of 7 days

Mechanical

Mechanical outline	330 x 88 x 104 mm
Optical access	4 x 25 mm diameter windows MOT cloud height – 6 mm from grating surface Cloud access angle 30^0 / horizontal plane (see diagram)
Weight	< 6.6 lbs (3.0 kgs)
Orientation	Any
Finish	Anodised
Markings/labels	Type number Model number Serial number High voltage hazard warning

Prime Power Requirements

Power consumption	15 W typical
Laser power	20 mW minimum (laser not provided)

Connectors

Power	USB-C
Trapping laser input connection	Bulkhead: FC/APC Polarisation maintaining fibre connector Fibre input: Thorlabs P3-630-FC-X – 630 nm PANDA polarisation maintaining APC patch cable

Control inputs

Push switches for anti-Helmholtz coils, rubidium dispenser and ion pump. External control for coils and rubidium dispenser via SMA connectors at TTL levels

Monitors

Anti-Helmholtz coil operation status, rubidium dispenser current and ion pump current are displayed on an LCD display

Technical Drawings

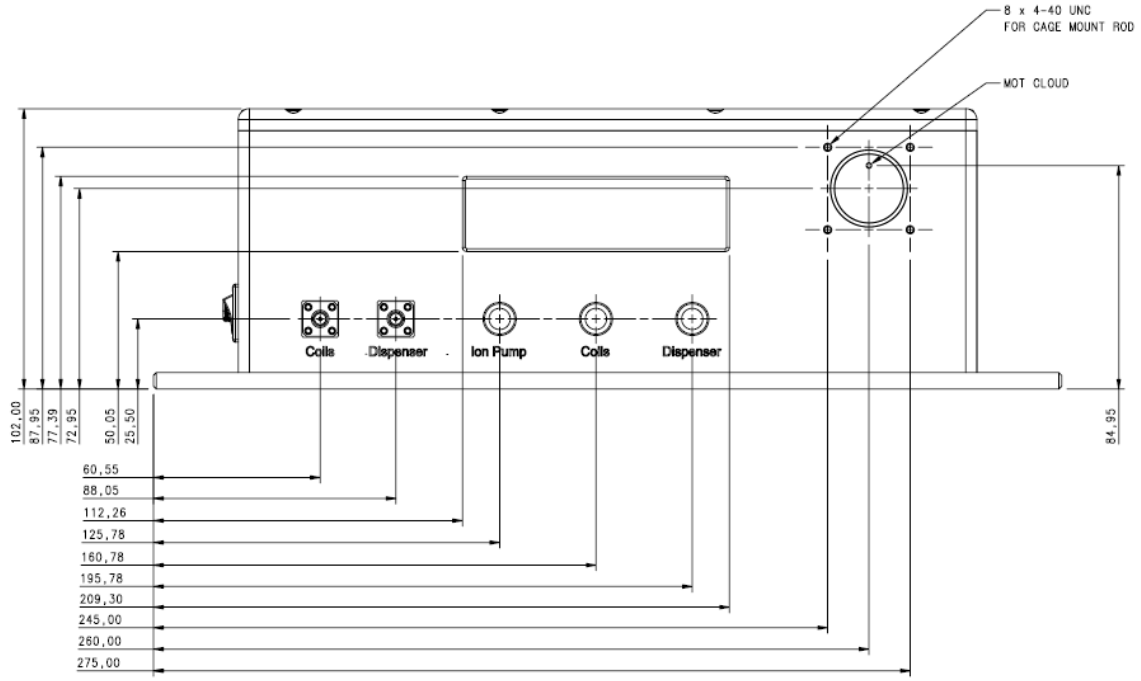

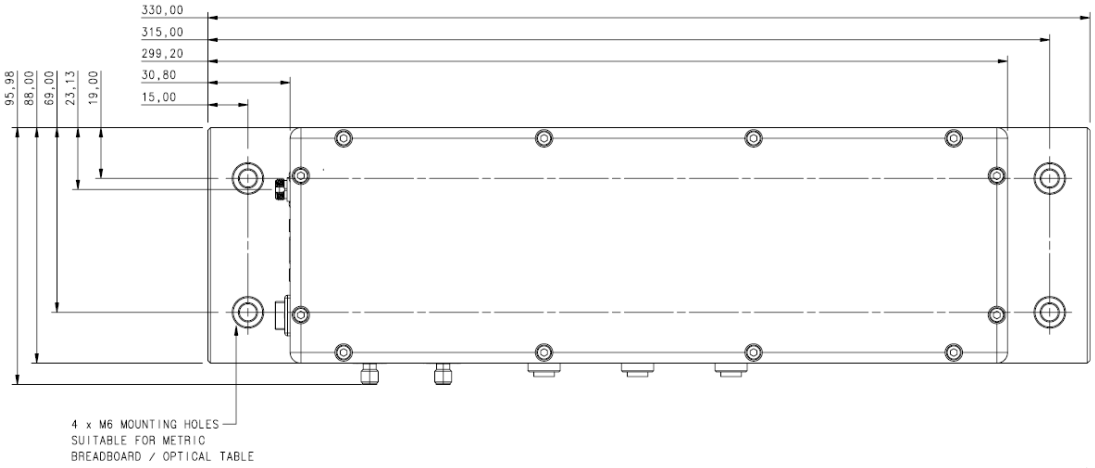

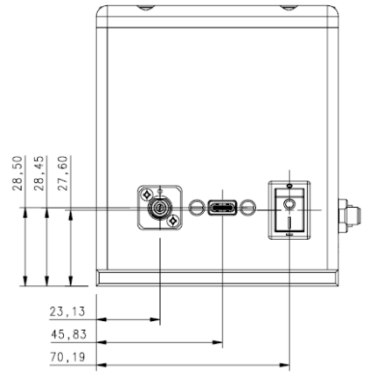

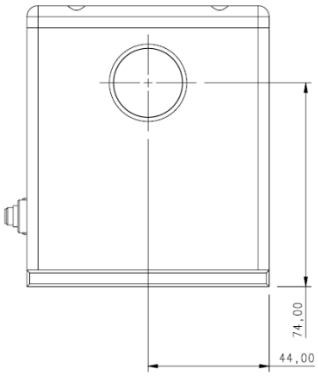

CPI TMD Technologies Ltd
Swallowfield Way Hayes Middx UB3 1DQ UK
Telephone +44 (0)20 8573 5555
Fax +44 (0)20 8569 1839
www.cpi-edb.com

This document gives only a general description of the products and/or services and is liable to update or improvement without notice. TMD Technologies accepts no responsibility for any interpretation of or reliance placed in this document.